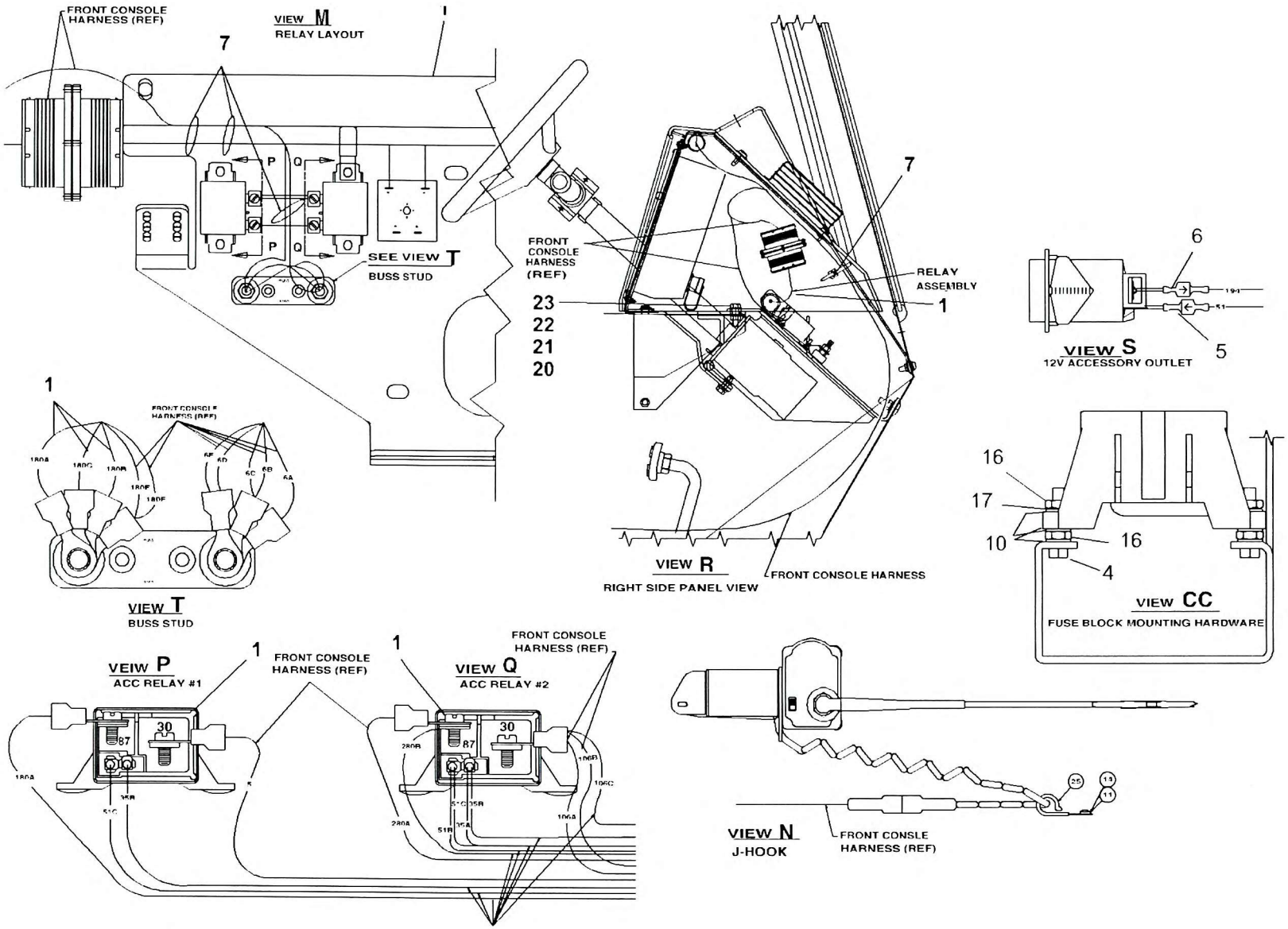
FRONT CONSOLE HARNESS (REF)
VIEW M
RELAY LAYOUT
7
P
Q
SEE VIEW T
BUSS STUD
FRONT CONSOLE HARNESS (REF)
23
22
21
20
7
RELAY ASSEMBLY
1
VIEW R
RIGHT SIDE PANEL VIEW
FRONT CONSOLE HARNESS
6
5
VIEW S
12V ACCESSORY OUTLET
1
FRONT CONSOLE HARNESS (REF)
VIEW T
BUSS STUD
16
17
10
16
4
VIEW CC
FUSE BLOCK MOUNTING HARDWARE
VEIW P
ACC RELAY #1
1
FRONT CONSOLE HARNESS (REF)
30
87
1
VIEW Q
ACC RELAY #2
FRONT CONSOLE HARNESS (REF)
30
87
VIEW N
J-HOOK
FRONT CONSLE HARNESS (REF)

(SHEET 3 OF 3)

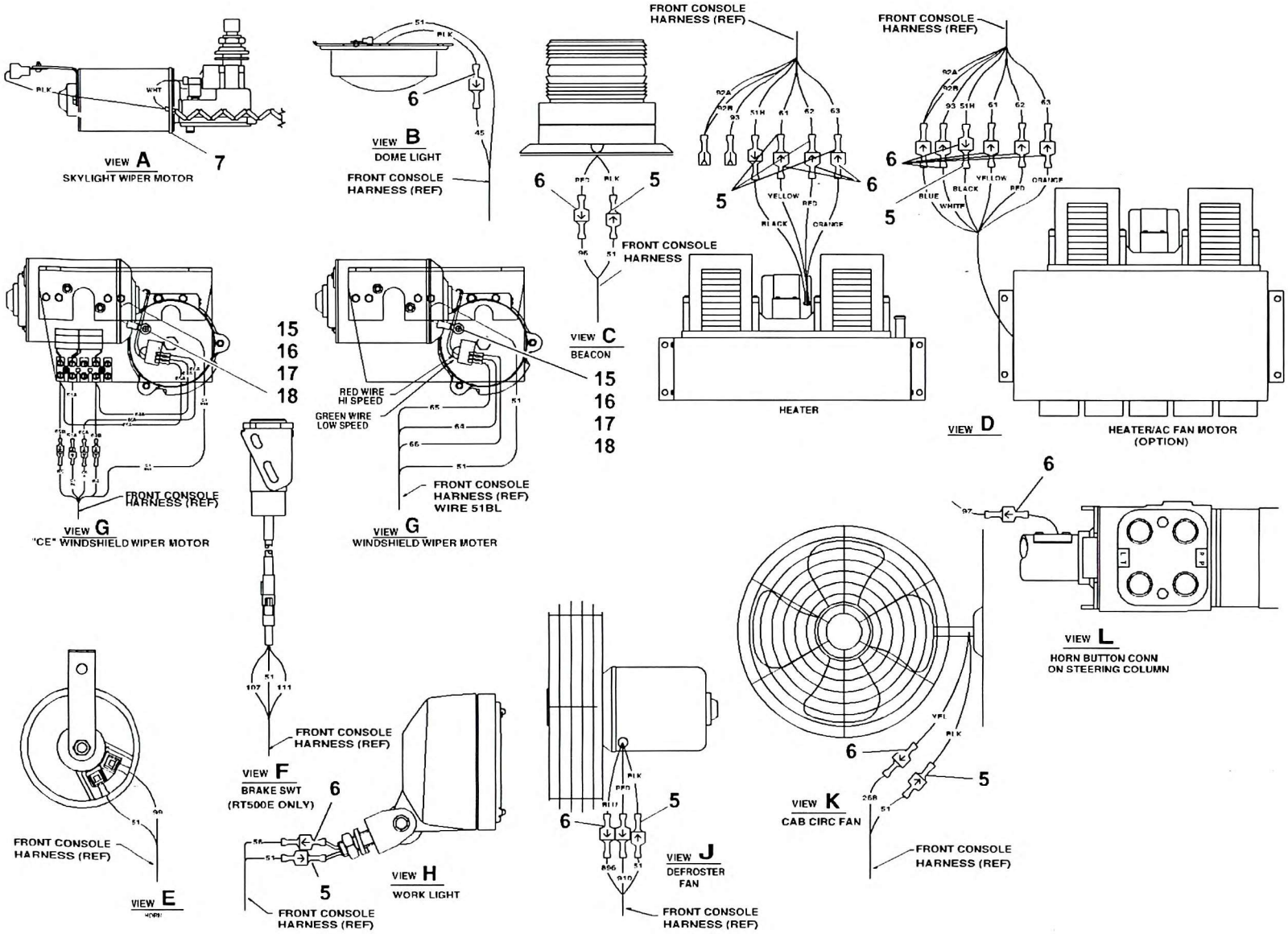

(SHEET 2 OF 3)

6978100706

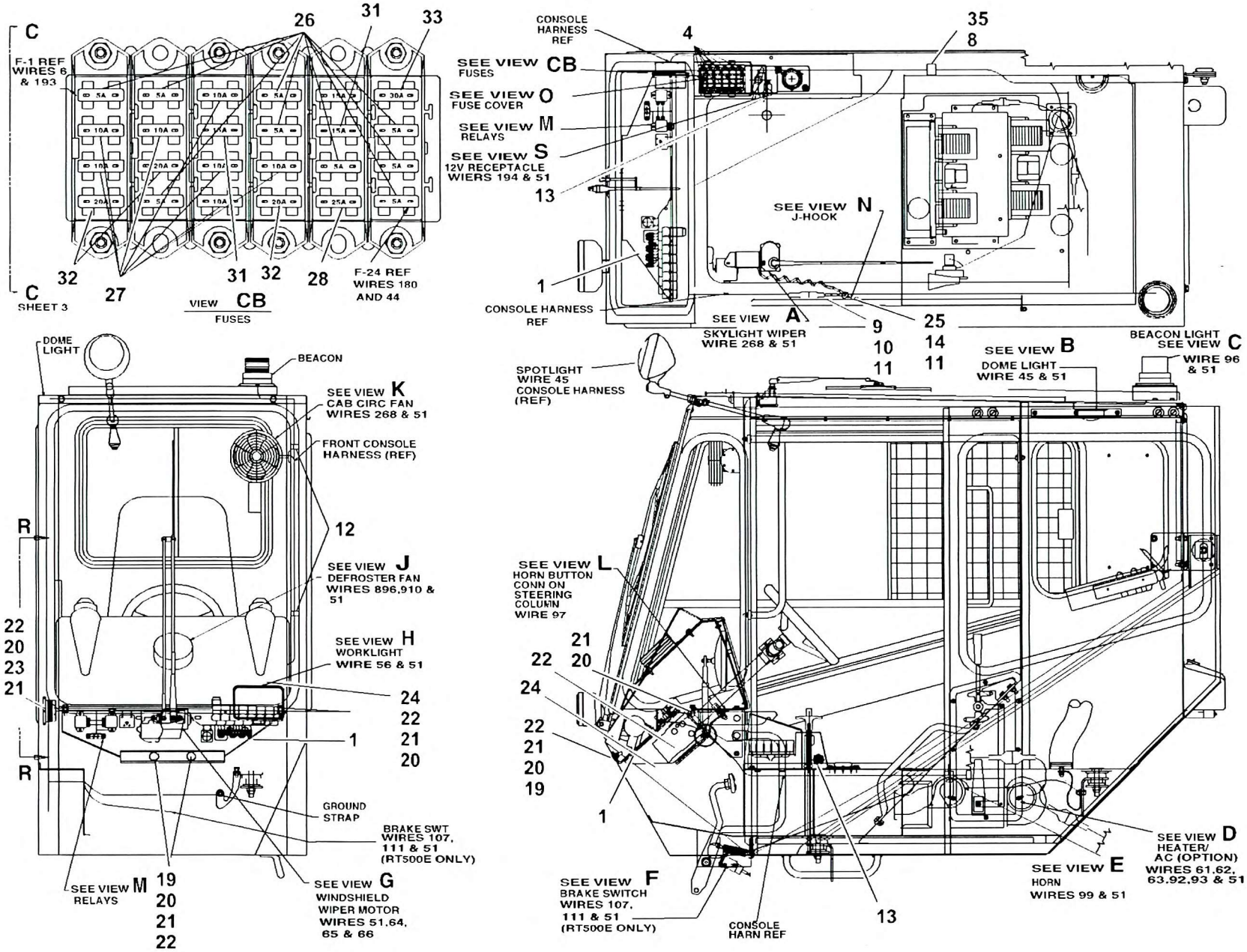
C
F-1 REF WIRES 6 & 193
26
31
33
32
27
31
32
28
F-24 REF WIRES 180 AND 44
C
SHEET 3
VIEW CB
FUSES
CONSOLE HARNESS REF
4
35
8
SEE VIEW CB FUSES
SEE VIEW O FUSE COVER
SEE VIEW M RELAYS
SEE VIEW S 12V RECEPTACLE WIERS 194 & 51
13
SEE VIEW N J-HOOK
1
CONSOLE HARNESS REF
SEE VIEW A SKYLIGHT WIPER WIRE 268 & 51
9
10
11
25
14
11
BEACON LIGHT SEE VIEW C WIRE 96 & 51
SEE VIEW B DOME LIGHT WIRE 45 & 51
SPOTLIGHT WIRE 45 CONSOLE HARNESS (REF)
DOME LIGHT
BEACON
SEE VIEW K CAB CIRC FAN WIRES 268 & 51
FRONT CONSOLE HARNESS (REF)
12
R
SEE VIEW J DEFROSTER FAN WIRES 896,910 & 51
22
20
23
21
SEE VIEW H WORKLIGHT WIRE 56 & 51
24
22
21
20
1
R
GROUND STRAP
BRAKE SWT WIRES 107, 111 & 51 (RT500E ONLY)
SEE VIEW M RELAYS
19
20
21
22
SEE VIEW G WINDSHIELD WIPER MOTOR WIRES 51,64, 65 & 66
SEE VIEW L HORN BUTTON CONN ON STEERING COLUMN WIRE 97
21
22
20
24
22
21
20
19
1
SEE VIEW F BRAKE SWITCH WIRES 107, 111 & 51 (RT500E ONLY)
CONSOLE HARN REF
13
SEE VIEW E HORN WIRES 99 & 51
SEE VIEW D HEATER/ AC (OPTION) WIRES 61,62, 63,92,93 & 51

(SHEET 1 OF 3)